LINEAR CAST STONE
ARCHITECTURAL STONE SPECIALISTS

Email: sales@linearcaststone.co.uk
Tel: 01623 761602
www.linearcaststone.co.uk

Moulded Window / Door Surrounds

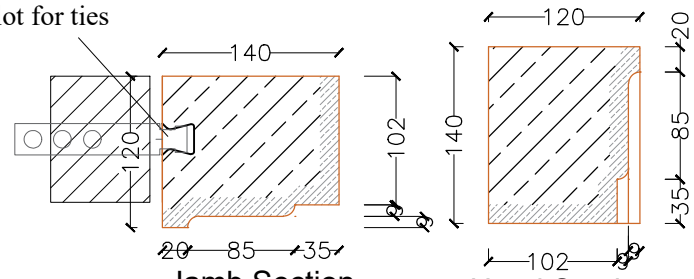

Jamb Section. Head Section.

Larger units supplied in suitable parts, with colour matched jointing compound.

6mm handling steel cast into units over 600mm length.

Headers decorative only, unless specified.
Lintel support required by others.

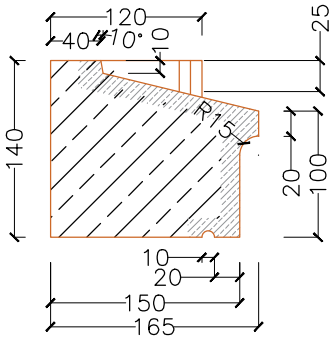

Cill Section.

SEEN FACES

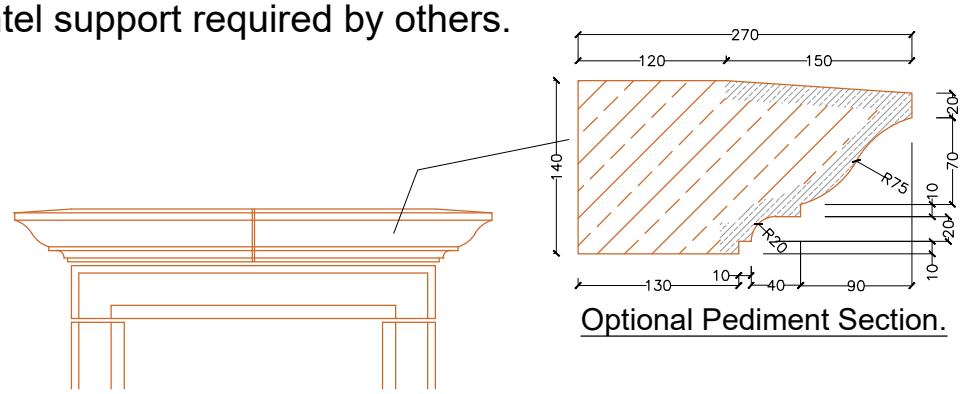

Optional Pediment Section.

Optional Pediment Cornice

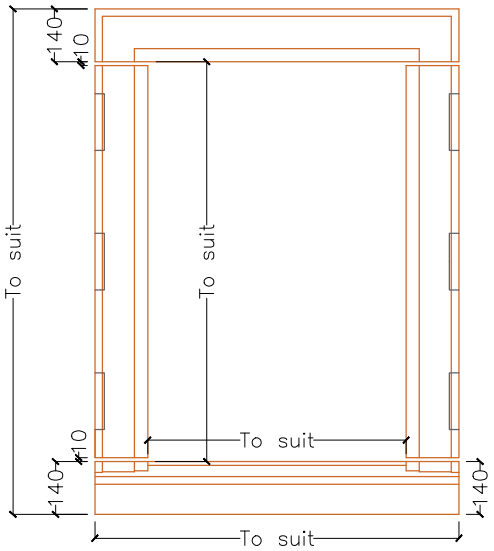

Bespoke sizes/profiles available on request

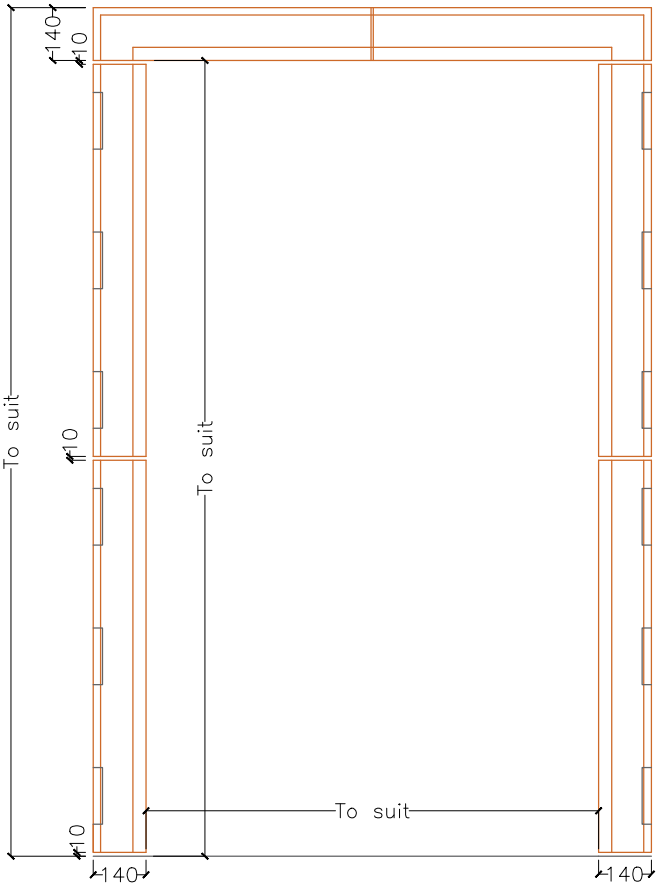

Drawing: L007